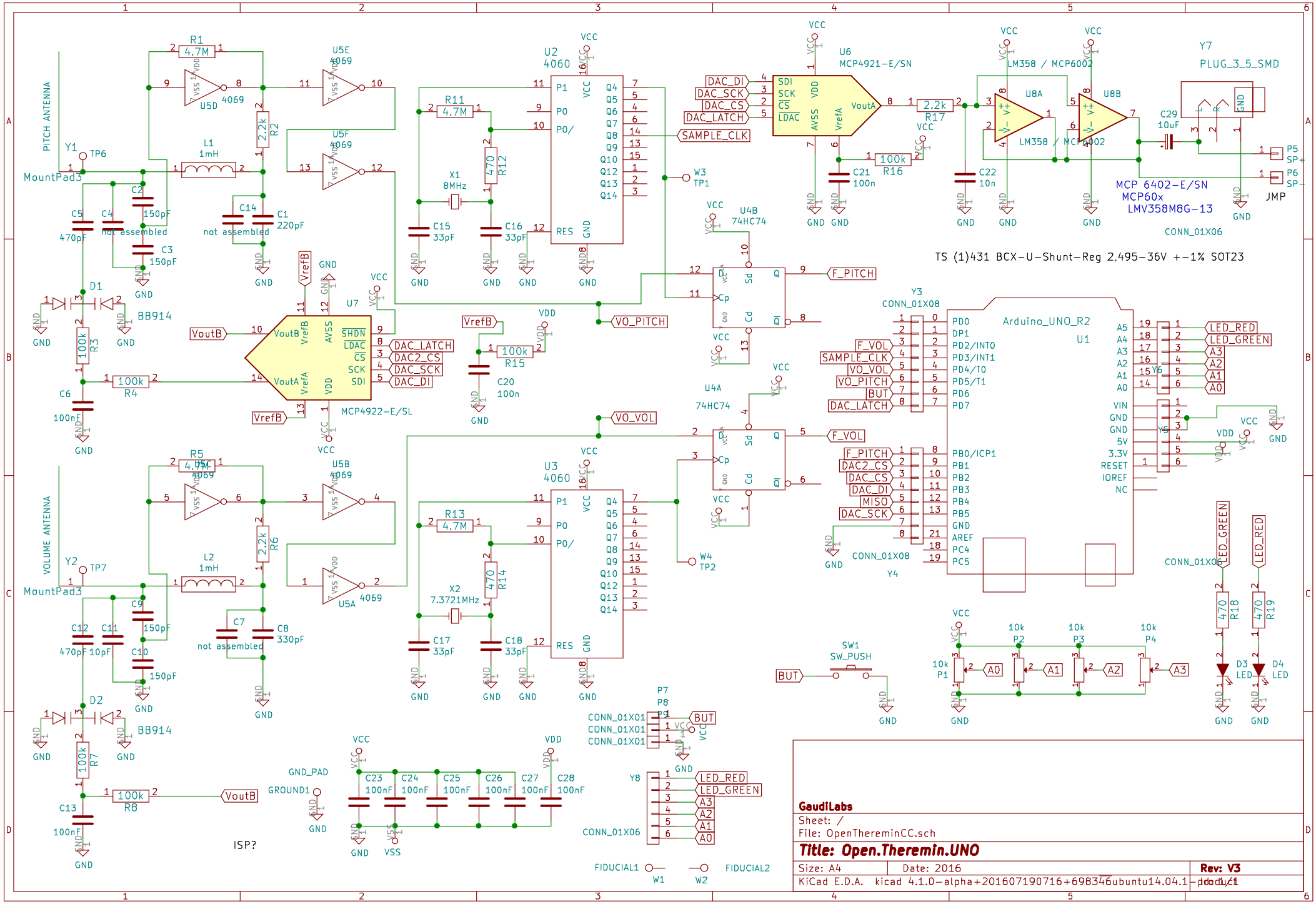
PITCH ANTENNA
VOLUME ANTENNA
U2 4060
U3 4060
U6 MCP4921-E/SN
U7 MCP4922-E/SL
U8A LM358 / MCP6002
U8B LM358 / MCP6002
MCP 6402-E/SN
MCP60x
LMV358M8G-13
Y7 PLUG_3_5_SMD
JMP
CONN_01X06
TS (1)431 BCX-U-Shunt-Reg 2.495-36V +-1% SOT23
U4B 74HC74
U4A 74HC74
Y3 CONN_01X08
Y4 CONN_01X08
U1 Arduino_UNO_R2
Y5 CONN_01X06
Y6 CONN_01X06
Y8 CONN_01X06
P7 CONN_01X01
P8 CONN_01X01
P9 CONN_01X01
SW1 SW_PUSH
BB914
ISP?
GND_PAD
GROUND1
FIDUCIAL1
FIDUCIAL2
GaudiLabs
Sheet: /
File: OpenThereminCC.sch
Title: Open.Theremin.UNO
Size: A4
Date: 2016
Rev: V3
KiCad E.D.A. kicad 4.1.0-alpha+201607190716+6983~46~ubuntu14.04.1-product
Id: 1/1